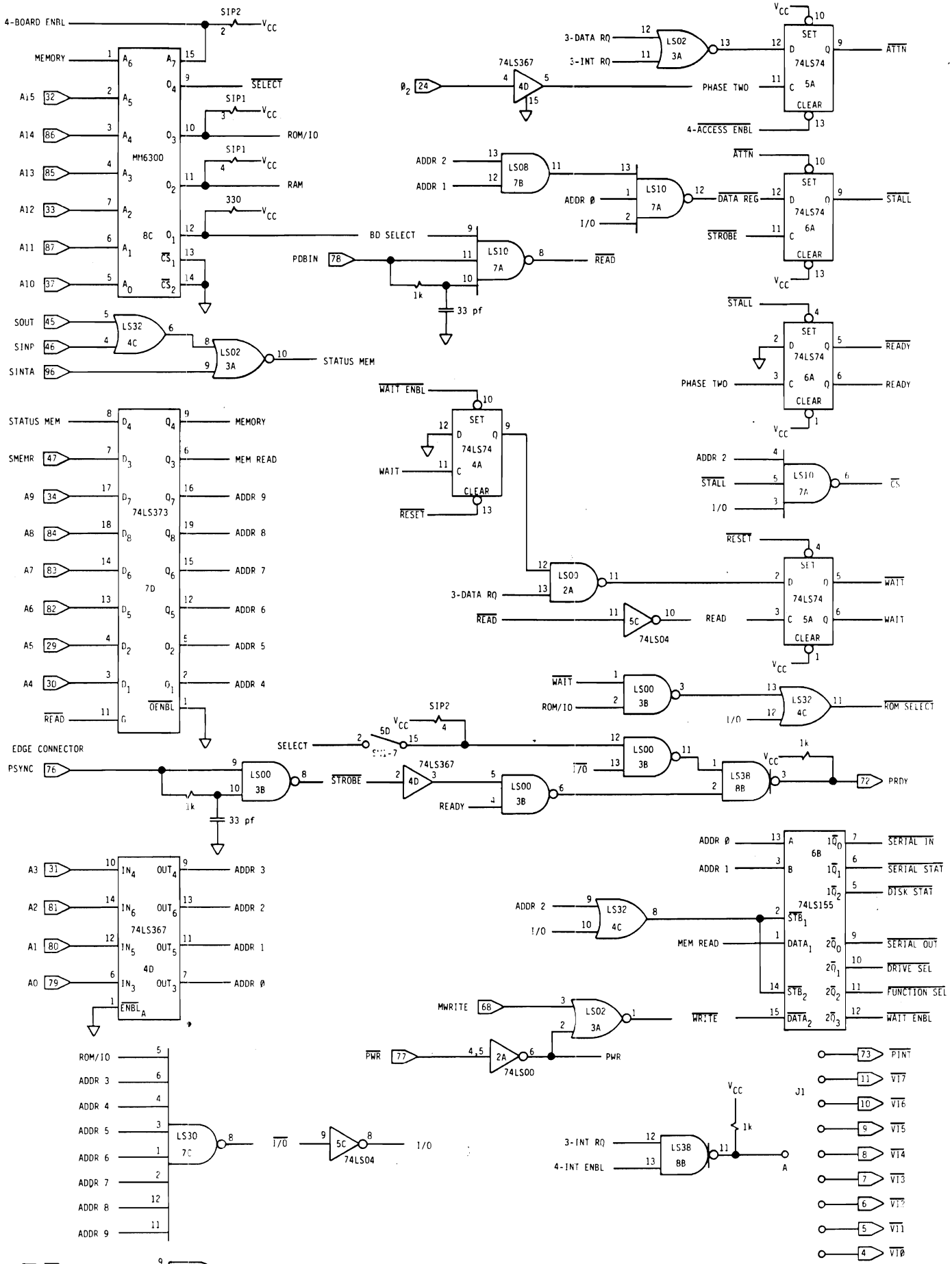

DISK JOCKEY 2D MODEL B

PAGE 1 OF 5

BOARD SELECT LOGIC, ADDRESS BUFFERS, READY LOGIC COPYRIGHT 1980 GEORGE MORROW

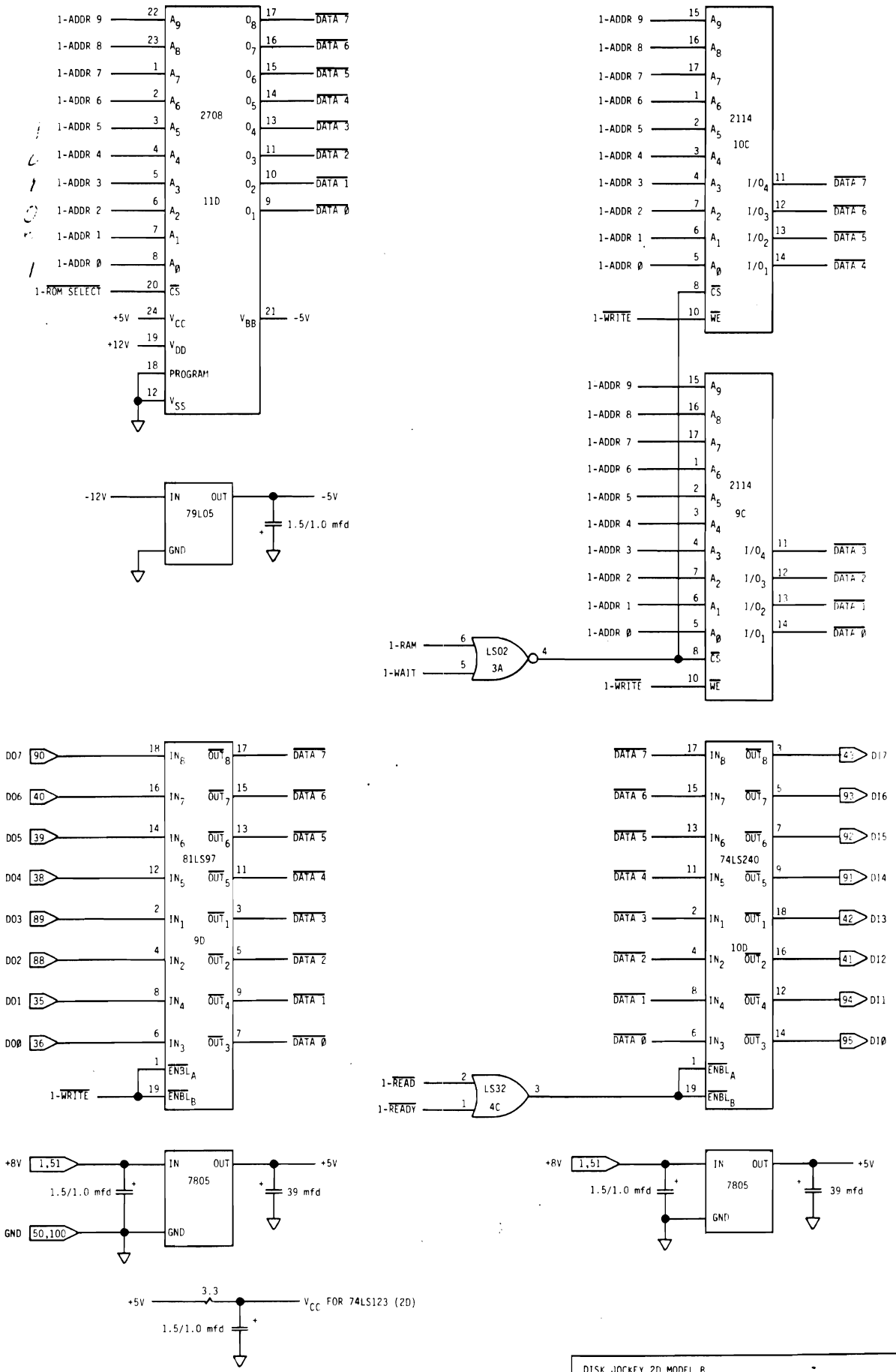

DISK JOCKEY 2D MODEL B

PAGE 2 OF 5

RAM, ROM, AND DATA BUFFERS

COPYRIGHT 1980 GEORGE MORROW

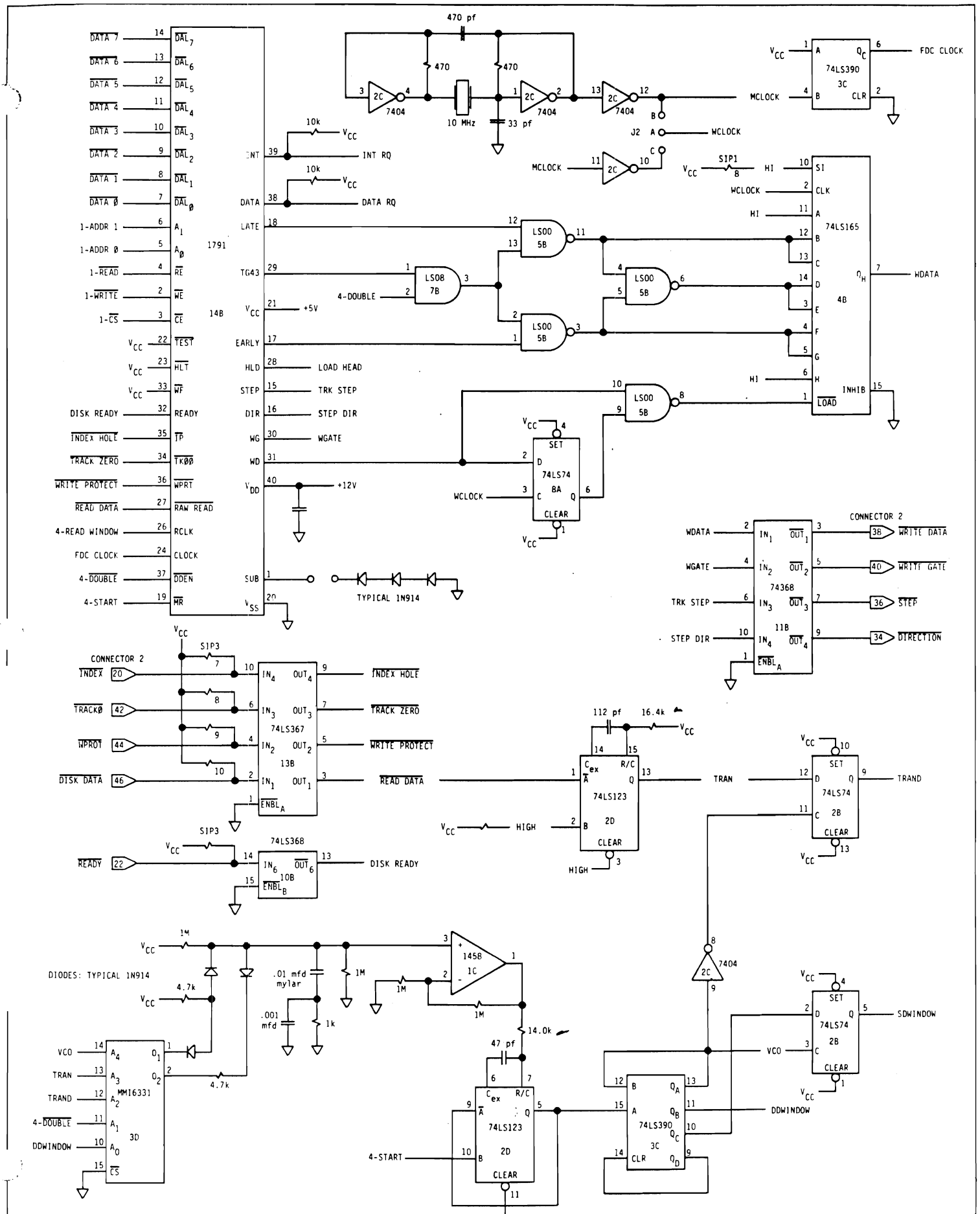

DISK JOCKEY 2D MODEL B

PAGE 3 OF 5

FDC CONTROLLER, SEPARATION & WRITE DATA LOGIC

COPYRIGHT 1980 GEORGE MORROW

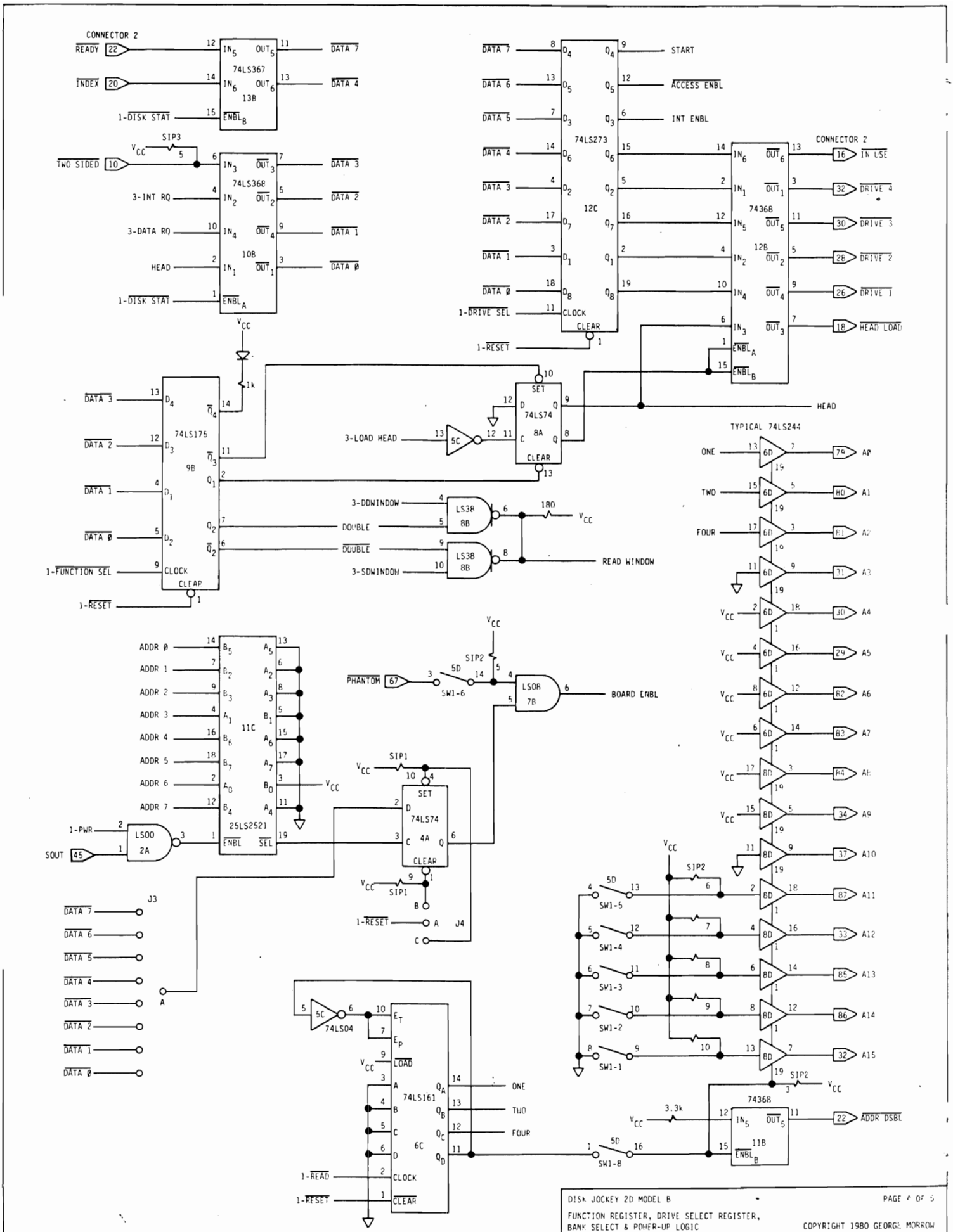

DISK JOCKEY 2D MODEL B

FUNCTION REGISTER, DRIVE SELECT REGISTER, BANK SELECT & POWER-UP LOGIC

COPYRIGHT 1980 GEORGE MORROW

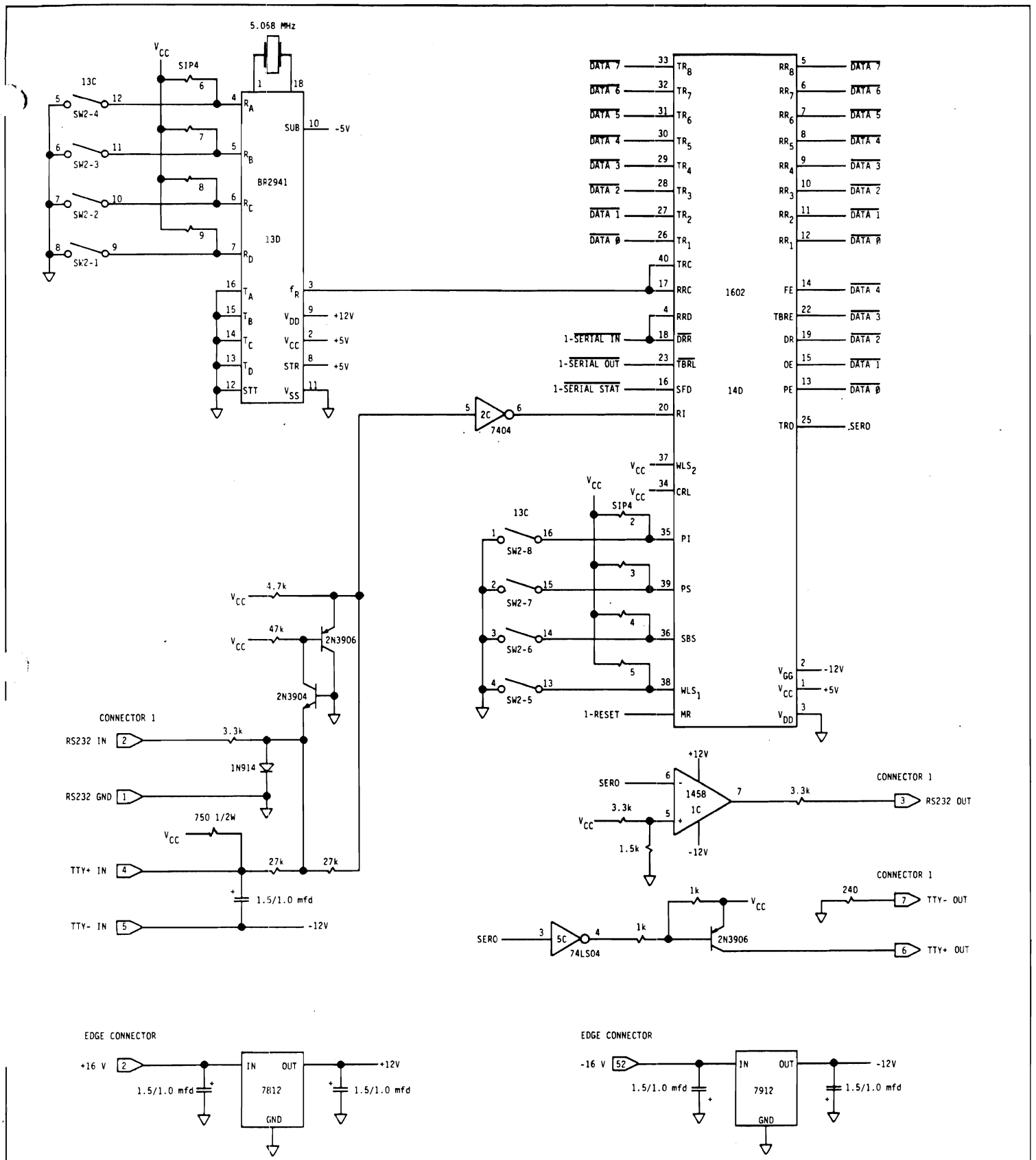

DISK JOCKEY 2D MODEL B

PAGE 5 OF 5

SERIAL INTERFACE LOGIC

COPYRIGHT 1980 GEORGE MORROW